the ONE* Premium

Premium Injection Molding Machine 500~3300Ton

the ONE* SERIES

LS Mtron

About LSMtron

The goal of LS injection molding machines is to meet and exceed the technology and quality requirements of all customers in the global market. We (in partnership with our customers) will expand entry into advanced markets with continuous technology and quality innovation that consistently creates value for our customers. This will lead to high and consistent earnings growth by anticipating and understanding market needs in advance and leveraging this knowledge and insight as an indicator to drive technology, leadership and innovation within the global market without ceasing. Beginning with the development of Korea's first direct compression injection molding machines, LS has always put the customer first. From customer focused and dedicated injection molding machine technology such as two-platen injection molding machines for molders of light guide plates and mobile phones to multi-color injection molding and ultimately to all-electric injection molding machines which are the fruit of the most advanced technology.

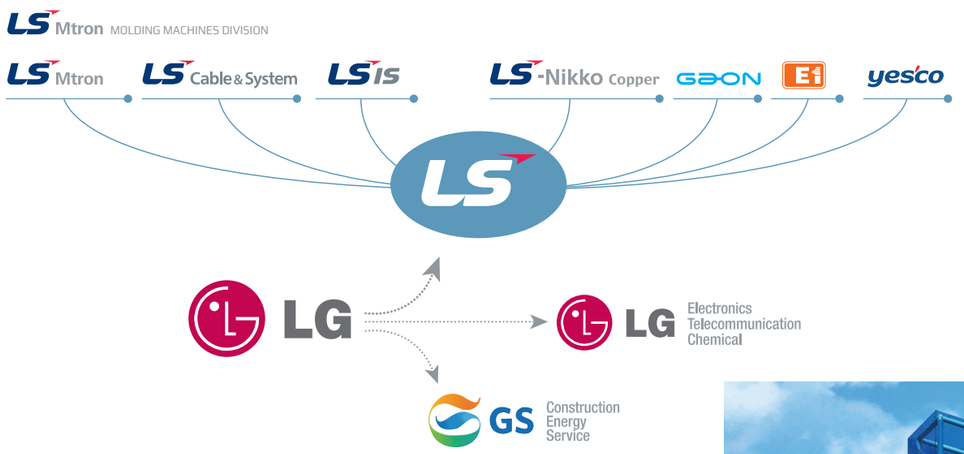

INNOVATIVE
TECHNOLOGY PARTNER

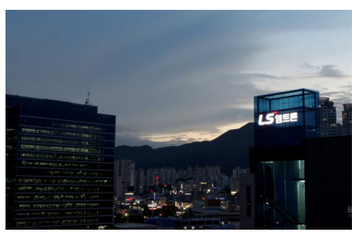

Integrated ONE Solution
Smart Machine for Industry 4.0
Delivering value

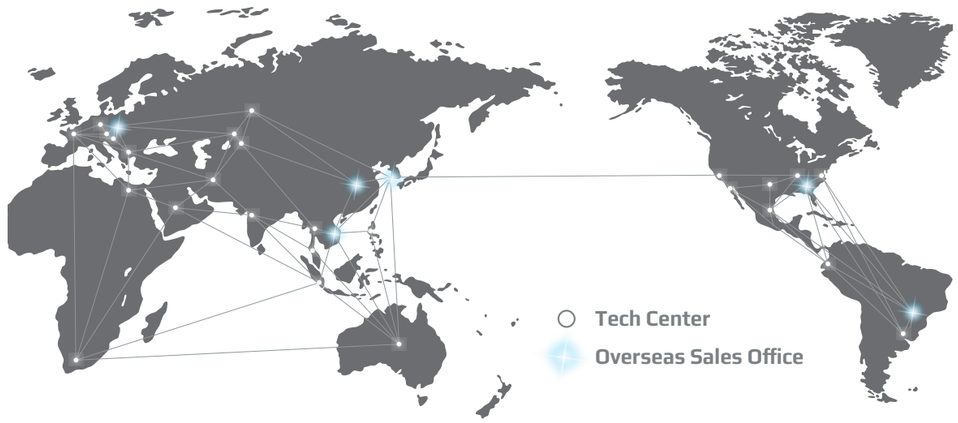

PREMIUM INJECTION MOLDING MACHINE

the ONE* SERIES (500~3300TON)

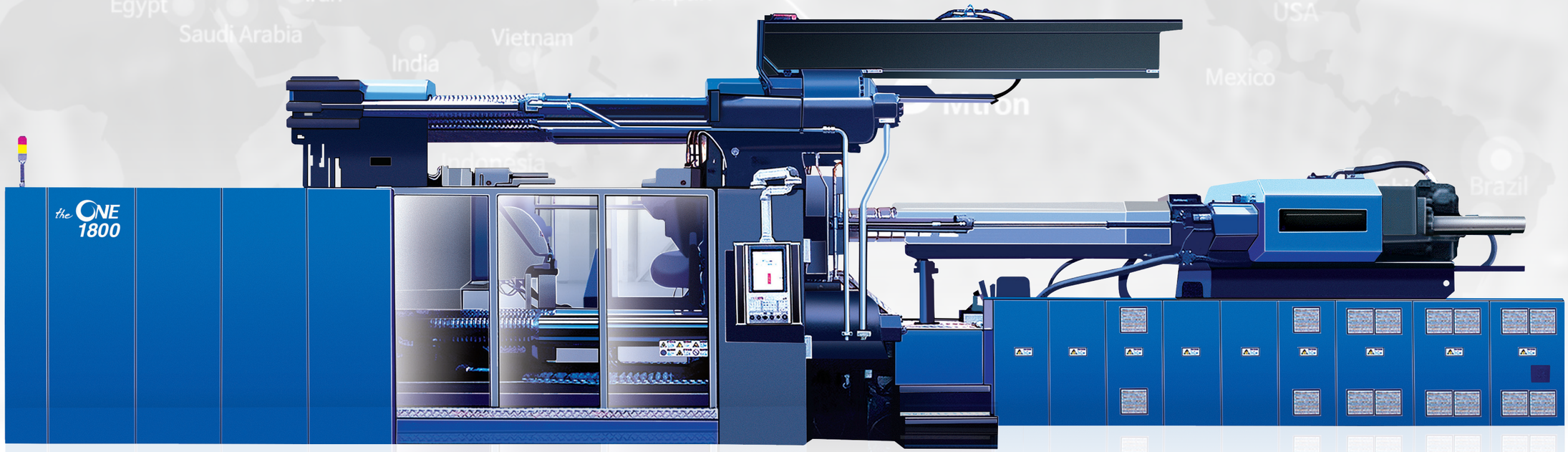

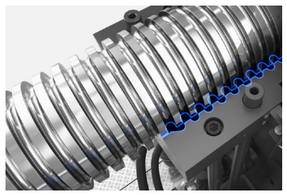

Fast and precise clamping Unit

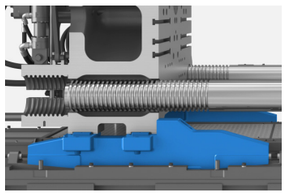

No Lubricant Sliding Bush

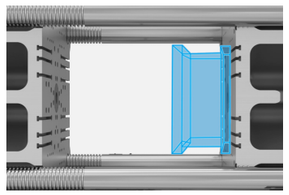

Heavy Mold Installation

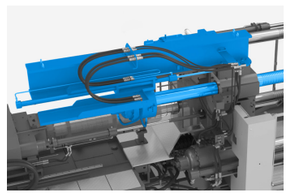

Tie-bar Pulling System (option)

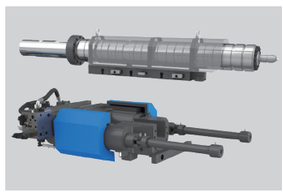

Quick Barrel Change System

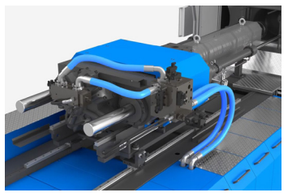

Injection Unit Structure Simplification

BEST SOLUTION FOR
AUTOMOTIVE PARTS

the ONE*
Best Solution for Production of Automobile Parts

Premium hybrid injection molding machine "*the* ONE*" is the most suitable IMM for high-precision molding items and optimized for light body structure injection, requiring precise and complete surface treatment. *the* ONE* helps to efficiently produce high-end body parts.

- **High productivity** Cycle time reduction
- **Defect rate zero** Minimized defect rate to optimise the production of body parts requiring completeness
- **Maintenance** Easy maintenance improves workers' productivity

"LS Mtron challenge to the customer does not stop."

PREMIUM INJECTION MOLD MACHINE FOR HIGH –END WHITE GOODS

the ONE*
Optimization solution for High end products

LS Mtron offer suitable solution against the customer's needs. We can design the IMM for high –precision. We can supply not only IMM but also the high performance values.

- **High Design Reproducibility** Meet the customer's need with Special IMM
- **Clean Surface** Precision injection ensures complete surface treatment
- **Innovative Jump** High quality solution with set up of Smart Factory

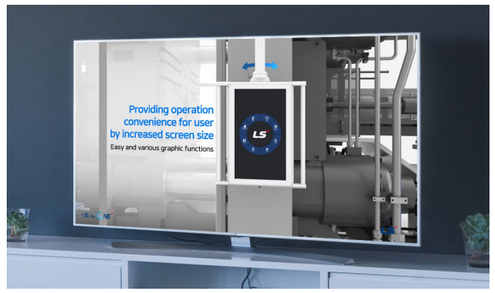

"LS Mtron challenge to the customer does not stop."

the ONE* Series
Special features

Reduction the running time 30%

- Vertical tightening at once

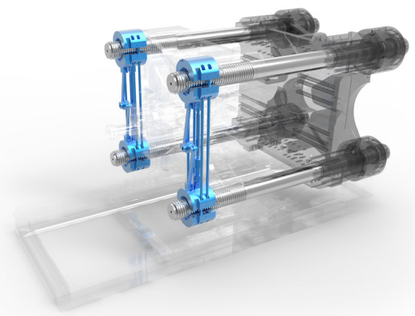

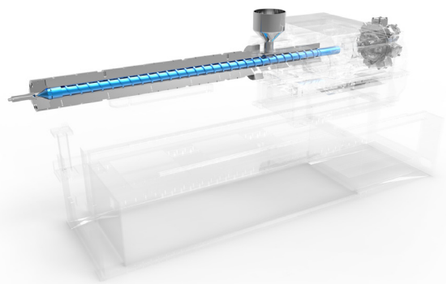

Optimized Screws for Injection

- Technical Agreement between LS Mtron and Nordson XALOY
- General screw for thermoplastic material
- 3 times more mixing compared with normal screw

Slide bush design without oil

- Tie-bar bending improvement : 40%
- Low wear and No lubrication

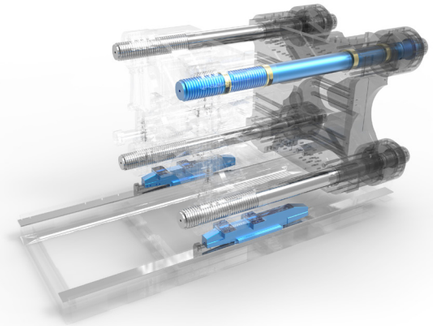

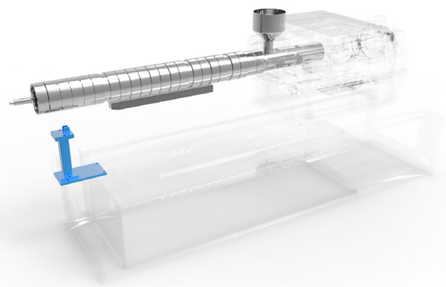

High durability of Barrel and Screw

- Support design for Barrel

Tie bar Pulling System option

- Easy maintenance with Once touch type
- No mold carrier even low ceiling

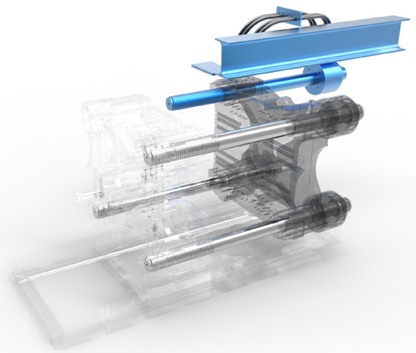

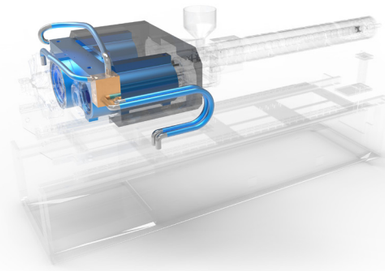

Simple structure of Hydraulic line

- Clean design : simplify the pipe and put inside

IMPROVING SPEED FOR MOLD OPENING AND CLOSING AND REPRODUCIBILITY FOR POSITION

the ONE* Reducing cycle time

- High pressure and rapid acceleration of hydraulic equipment
- Compact mold open & close transfer cylinder
- High Speed Mechanism without Frictional Force of tie bar of moving platen
- Application of special Oil-free sliding bush with abrasion resistance and shock resistance for fast moving platen-> No thermal deformation, optimized for high loads and continuous production
- Fast and accurate half-nut system

the ONE* SSI Type High-precision digital position sensor

- More precise than previous analog type sensor
- The resolution is 1μm
- Repeat precision : Below±0.001%
- Linearity : Below±0.001%

the ONE* High-performance high-capacity electronic proportional valve

- Flow Precision Control Functions
- Maximum flow rate 180 →1000 ℓ/min
- Hysteresis : below 0.1%
- Repeatability : below 0.05%

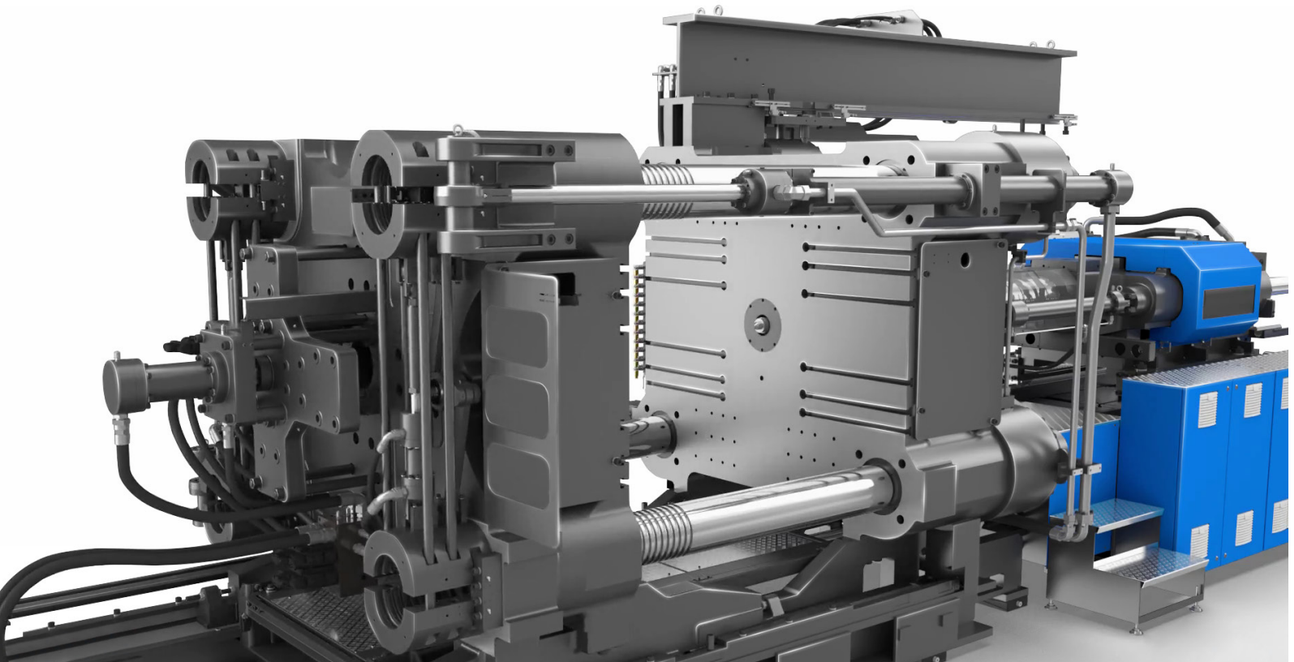

the ONE* High-Strength Platen Structure

- Improved platen thickness and stiffness design (reducing deformation reduction and improving maintaining clamping force)
- Deformation test
  1400ton : 45% Decreased
  1800ton : 34% Decreased

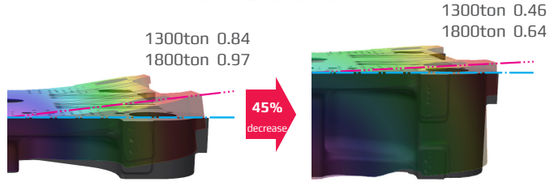

* Above is comparison data with the previous model

the ONE* Improving structure of half-nut

- Reducing time of half nut tightening (30%)
- Simultaneous left and right movements
  -> simultaneous upper and low movements
- Horizontal support effect for tie bar when half nut is closed Improved shape of tie-bar, half-nut and screw
  -Trapezoidal screw → U-shaped screw
  -Reinforcement of screw strength and reduced half-nut bite error
  -Improved stability for high pressure mold opening
- Applies oil-free sliding bushings
  Clean environment with small amount of grease
- Location sensor forclamping unit : SSI type

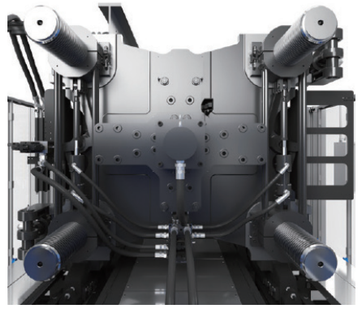

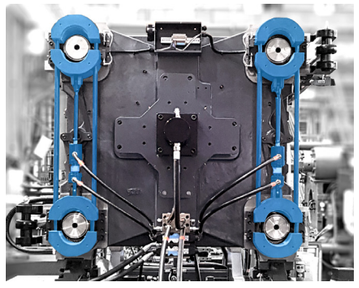

NEW model's half nut structure

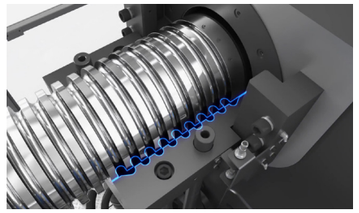

New model's U-shaped tooth form

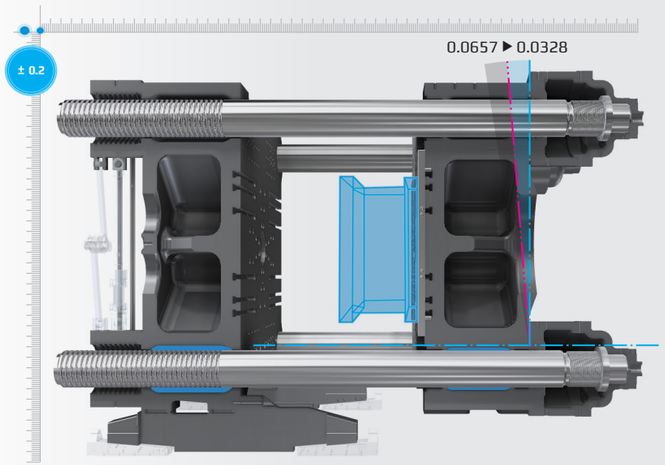

Available for heavy mold mounting

- Reproducibility of open and closed position : ± 0.2 (improving for speed of Mold open & close and Location reproducibility
- No tie bar bush on moving platen (High-speed mechanism without friction) Structural improvement for support system of fixing and moving platen
- Heavy mold weight of 2.5% of tonnage allowed

Existing madel NEW model

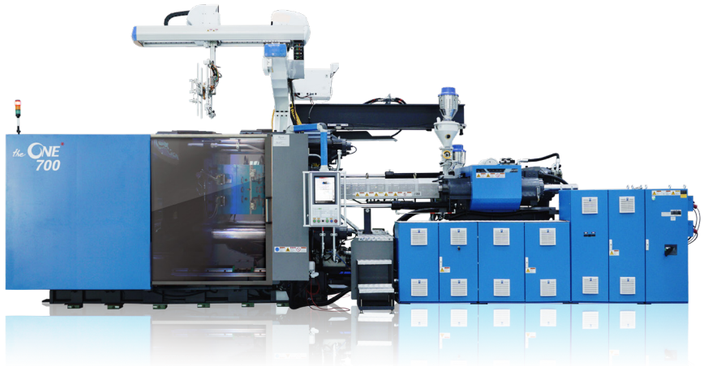

the ONE* Tie-bar pulling system option

- One touch Tie bar separation
- No need to disassemble & reassemble
- Easy mold replacement on low ceiling factory
- No need to use mold carrier on low ceiling factory

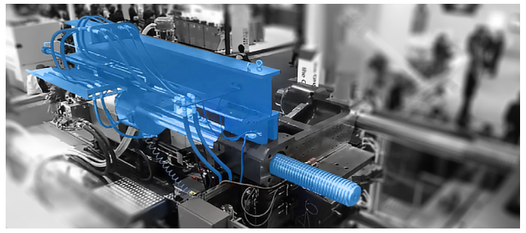

the ONE* No lubrication Sliding Bush applied

- 40% improvement on Tie-bar dropping
- Semipermanent self-lubrication Bush applied
- No need for Maintanence

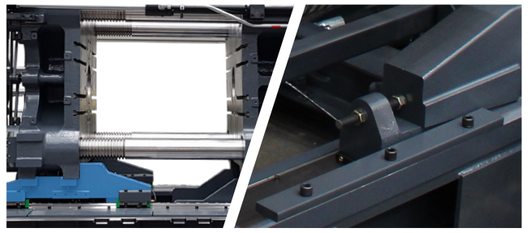

the ONE* Remove moving platen Tie-bar bush

- No Bush abrasion
- No need for lubrication

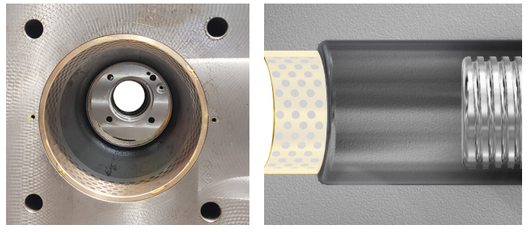

Injection Unit
Structure improvement applied

the ONE* Quick barrel change system

- Lift barrel up when Barrel assy is replaced, not turning a whole injection unit

the ONE* Good for Modulation

- Barrel assy change & Nozzle cylinder adjustment for Y,A,B screw replacement
- Injection unit change for down-modulation without frame change or adjustment.

the ONE* Movement Zero nozzle touch structure

- Nozzle cylinders are installed parallel to a barrel, so it can prevent Moment by one-side deflection
- Improvement for resin leakage
- Longer durability of cylinder & plasticizing capacity components.

the ONE* Applies the barrel support device standard (Deflection prevention)

- Longer durability of barrel & screw

the ONE* Injection Piston structure improvement

- Prevents piston rod nut from loosening
- Simplified hydraulic lines
- Improved injection speed, pressure by high pressurization

the ONE* Simplify hydraulic line

- Oil line inside platen to prevent oil leakage and improve appearance

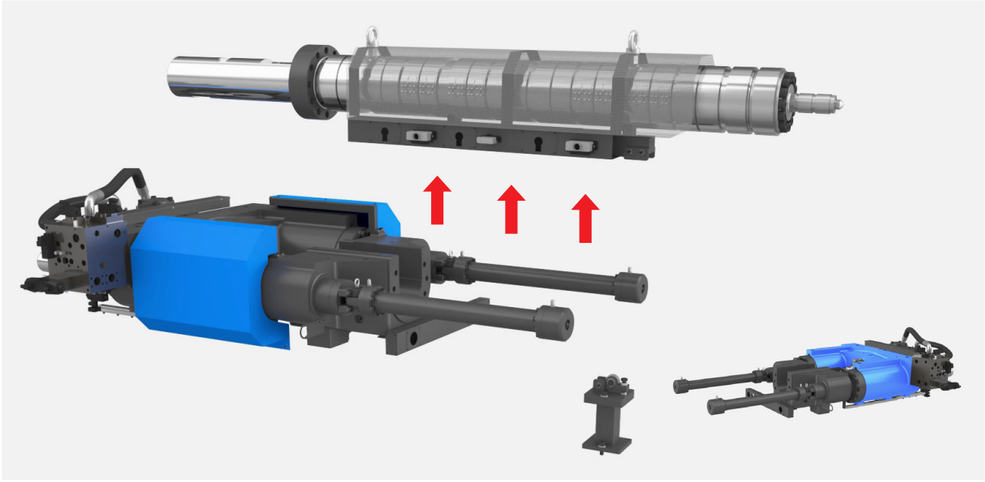

Easy and convenient maintenance

the ONE* **Simple & Safe maintenance**

- Stable production by Barrel supporting part
- Clean working environment by clamping side oil lubrication and recovery system.
- Various safety interlocks for safe work environment

the ONE* **Oil leakage prevention**

- No welding slug and Zinc galvanized pipe is applied
- FKM[1)] sealing applied pipe fitting & O-ring type hose fitting
- Oil tank special coating Oil cleanliness improved

the ONE* **100% No Welding slug**

- Zinc galvanized pipe is applied
- No Welding slug generation
- FKM sealing applied pipe fitting & O-ring type hose fitting

1) FKM

Optimal sealing for injection molding machine with great durability to prevent oil leakage

the ONE* **Oil tank internal cleanliness improved**

- Tank internal part is ceramic & glass special coating applied

Tank Traditional

Tank Now madel

the ONE* **Packing cover separate structure applied**

- Easier for packing replacement

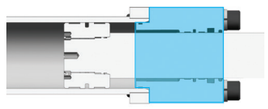

Previous Model
(Packing cover integrated structure)

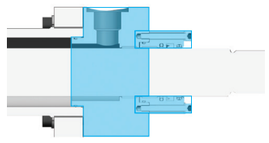

New model
(Packing cover separable structure)

Integrated ***ONE Solution***
Smart Machine *for Industry 4.0*
Delivering ***value***

CONTROL SYSTEM (KEBA CONTRLLER)

User Sequence changed : Easy maintenance & Flexible for user demand

- Provides operational convenience for users by increasing the screen size
- Convenient operation with High-response color panel

- Easy and various graphic functions
- Real-time data adjustment and operation
- Function to search data on molds

- Easy to analyze cycles with monitoring screen
- East to convert unit
- Adds a memo function : possible to make an independent memo and associate with mold information

- Possible to monitor and communicate with peripheral devices.
- Possible to monitor I/O and turn ON/OFF the forced output on the touch screen

- User-friendly UI
- User can change the sequence of cycles
- Mix and match units (psi,inch,mm,bar, etc.)
- Multi language selection
- Multi-level, customizable password control for each user.

Clamping Page

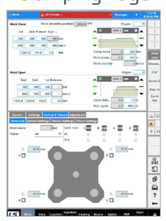

Core Page

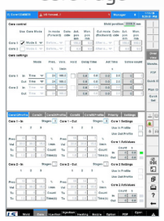

Injection Page

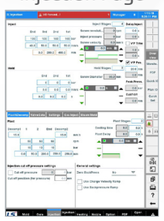

Graph Page

Heater Page

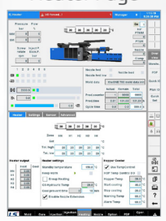

Setting Page

the ONE* Customer's Benefits

- Easy to analyze and monitor an injection molding process with the improved user interface
- Easy to maintain and change the User's sequence
- Responding flexibly to customer's demand

MULTI COUPLING SYSTEM option

Multi-coupling System, the Solution connects electric line and all the hydraulic material at once, guarantees the safety and improves the process efficiency for maximum.

the ONE* Coverage

- Mold temperature control line (Cooling and Heating Water and Oil)
- Core Cylinder Operation (Hydraulic Line)
- Gradually Valve Control (Pneumatic, Hydraulic, etc.)
- Hot Runner (Heater Power, Thermocouple), signals, etc.

the ONE* Feature

- Quick Coupling Solution : penetrative (through type) and Oil leakage protection type
- A variety of Standard and Options for User's convenience Solution with High-temperature that can be used up to 300 ºC
- Possible to make Standard or Customizable production

* The product and service are options supported by Stäubli Korea

MAGNETIC CLAMP option

Magnetic Clamp is fast and easy to install, the operator doesn't need to be near the mold.
Suitable for those who change several type of molds frequently.
Possible to magnetize and deactivate with the simple button operation.

the ONE* Feature

- A variety of Functions related to Safety Energy Saving
- Magnetization within 1 second (Clamping)
- Uniform Mold fastening : Volume reduction of Mold (Clamping part)

the ONE* Fully integrated interface

- Detection predicting the mold movement
- Possible to check clamping power with display
- Possible to save the mold data
- Temperature sensing

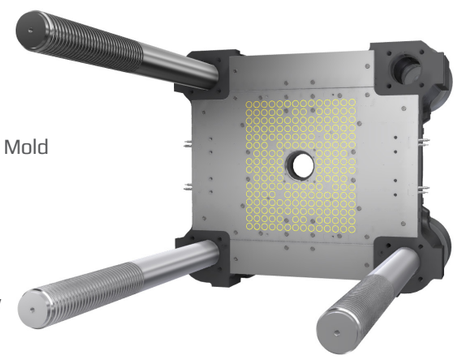

* The product and service are options supported by Stäubli Korea

Total Injection Management
Possible to maintain at a time

the ONE*

CSI-M
Solution

the ONE*

CSI-C
Solution

Integrated ***ONE Solution***
Smart Machine *for Industry 4.0*
Delivering ***value***

the ONE* CSI SOLUTION [Injection Production & Process total management solution] option

LSMTRON's CSI Solution can support the customer to respond about the 4th Industry Revolution & Digital Transformation more quickly.
The Solution is processing from an initial stage (data gathering) to composing the meaningful information stage, furthermore to processing the Big Data & applying A.I to intelligence stage. Currently We are providing the CSI – M & CSI – C.

the ONE* CSI – M [Total Injection management] option

CSI-M is a solution to the datafication and informatization stages.
It provides data interface and data collection and monitoring function for customer directly to extract information from injection molding machine.

the ONE* Data Interface

- Supporting three kinds of interface for responding to the customers' needs for composing customer's data.
- Modbus system(the most generally used in industry field)
- OPC system(DA)(standardized date transmission)
- Europe Plastic & Rubber manufacturers association's Euromap67 (software for Personnel Computer)

the ONE* I.M.M Monitoring System

- MBO for C.E.O & Real time monitoring system for the manager
- Provided the MES & ERP linkage function by the professional software development company

the ONE* CSI – C [Total control of Focusing I.M.M] option

CSI – C is providing control function & monitoring
the necessary equipments for injection production though I.M.M user screen.

- Reliability improvement of collected data
- Injection data and auxiliary equipment's data are synchronized through the I.M.M.
- Prevents incorrect input conditions by user through automatic loading of mold data and setting of auxiliary equipment parameters (Robot, Dryer, Hot Runner, etc.)
- Reduction of installation time/expense by decreasing communication line from I.M.M to equipments

LS Premium Injection Molding Machine

the ONE* Series

INJECTION UNIT | Major Specification

			theONE* 500						theONE* 600									theONE* 700												theONE* 900											
Injection Unit Code			i30			i46			i30			i46			i64			i30			i46			i64			i101			i46			i64			i101			i135		
Screw Code			Y	A	B	Y	A	B	Y	A	B	Y	A	B	Y	A	B	Y	A	B	Y	A	B	Y	A	B	Y	A	B	Y	A	B	Y	A	B	Y	A	B	Y	A	B
Screw Diameter		mm	60	70	80	70	80	90	60	70	80	70	80	90	80	90	105	60	70	80	70	80	90	80	90	105	90	105	115	70	80	90	80	90	105	90	105	115	105	115	125
Injection Capacity Calculated		㎤	1,089	1,482	1,935	1,693	2,212	2,799	1,089	1,482	1,935	1,693	2,212	2,799	2,488	3,149	4,286	1,089	1,482	1,935	1,693	2,212	2,799	2,488	3,149	4,286	3,690	5,022	6,024	1,693	2,212	2,799	2,488	3,149	4,286	3,690	5,022	6,024	5,498	6,596	7,793
Injection Capacity	PS	g	1,003	1,365	1,783	1,560	2,038	2,579	1,003	1,365	1,783	1,560	2,038	2,579	2,293	2,902	3,950	1,003	1,365	1,783	1,560	2,038	2,579	2,293	2,902	3,950	3,400	4,628	5,551	1,560	2,038	2,579	2,293	2,902	3,950	3,400	4,628	5,551	5,067	6,078	7,181
	PE	g	792	1,078	1,408	1,232	1,609	2,036	792	1,078	1,408	1,232	1,609	2,036	1,810	2,291	3,118	792	1,078	1,408	1,232	1,609	2,036	1,810	2,291	3,118	2,684	3,654	4,383	1,232	1,609	2,036	1,810	2,291	3,118	2,684	3,654	4,383	4,000	4,798	5,669
	PP	g	771	1,049	1,370	1,199	1,566	1,982	771	1,049	1,370	1,199	1,566	1,982	1,762	2,230	3,035	771	1,049	1,370	1,199	1,566	1,982	1,762	2,230	3,035	2,613	3,556	4,266	1,199	1,566	1,982	1,762	2,230	3,035	2,613	3,556	4,266	3,893	4,670	5,518
Injection Pressure		Mpa	273	201	154	265	203	161	273	201	154	265	203	161	253	200	147	273	201	154	265	203	161	253	200	147	269	198	165	265	203	161	253	200	147	269	198	165	240	200	169.3
		kgf/㎠	2,784	2,045	1,566	2,707	2,073	1,638	2,784	2,045	1,566	2,707	2,073	1,638	2,578	2,037	1,497	2,784	2,045	1,566	2,707	2,073	1,638	2,578	2,037	1,497	2,748	2,019	1,683	2,707	2,073	1,638	2,578	2,037	1,497	2,748	2,019	1,683	2,447	2,040	1,727
Injection Rate		㎤/sec	385	524	684	461	603	763	385	524	684	461	603	763	651	823	1,121	385	524	684	461	603	763	651	823	1,121	805	1,096	1,315	461	603	763	651	823	1,121	805	1,096	1,315	1,021	1,225	1,447
Plasticizing Capacity		kg/h	254	315	373	300	373	435	254	315	373	300	373	435	373	435	554	254	315	373	300	373	435	373	435	554	435	554	613	300	373	435	373	435	554	435	554	613	554	613	687
		g/sec	71	87	104	83	104	121	71	87	104	83	104	121	104	121	154	71	87	104	83	104	121	104	121	154	121	154	170	83	104	121	104	121	154	121	154	170	154	170	191
Max Screw Speed		rpm	240	210	180	200	180	160	240	210	180	200	180	160	180	160	140	240	210	180	200	180	160	180	160	140	160	140	125	200	180	160	180	160	140	160	140	125	140	125	115
Heater Capacity		kw	18.6	24.1	31.3	23.3	31.3	40.5	18.6	24.1	31.3	23.3	31.3	40.5	30.5	40.5	57.5	18.6	24.1	31.3	23.3	31.3	40.5	30.5	40.5	57.5	41.2	57.5	68.6	23.3	31.3	40.5	30.5	40.5	57.5	41.2	57.5	68.6	51.9	68.6	86.0
Injection Speed		mm/sec	134			120			134			120			129			134			120			129			127			120			129			127			118		
Injection Stroke		mm	385			440			385			440			495			385			440			495			580			440			495			580			635		
Clamping Force		KN	4,902						5,909									6,878												8,852											
		ton	500						603									701												903											
Mold Opening Force		KN	362						425									493												643											
		ton	36.9						43.3									50.2												65.6											
Distance Between Tie-rods		mm	920x810						1,010x910									1,110x960												1,180x1,010											
Die Plate Dimension		mm	1,300x1,250						1,400x1,350									1,510x1,440												1,620x1,540											
Daylight		mm	1,550						1,750									1,850												2,300											
Opening Stroke	Min	mm	650						750									750												1,100											
	Max	mm	1,200						1,350									1,400												1,800											
Mold Thickness	Min	mm	350						400									450												500											
	Max	mm	900						1,000									1,100												1,200											
Max. Mold Weight		kg	8,000						9,500									11,000												13,000											
Clamping Speed Max.		m/min	60			60			60			60			60			58.5			60			60			43.7			44			58.7			60			60		
Open Mold Speed Max.		m/min	60			60			60			60			60			60			60			60			45.5			45			60			60			60		
DRY CYCLE (EUROMAP 6)		sec	2.6			2.6			2.9			2.9			2.9			3.3			2.9			2.9			4.5			5.7			3.8			3.3			3.3		
		mm	640			640			710			710			710			780			780			780			780			830			830			830			830		
Ejector Force		kN	106						106									106												218											
		ton	10.8						10.8									10.8												22.2											
Ejector Stroke		mm	250						250									250												300											
Capacity of Motor		kw	28.3+56.3			28.3+56.3			28.3+56.3			28.3+56.3			36.7+71.9			28.3+56.3			28.3+56.3			36.7+71.9			71.9x2			28.3+56.3			36.7+71.9			71.9x2			56.3x3	
Utilized Oil Quantity		L	1,100			1,100			1,100			1,100			1,400			1,100			1,100			1,400			1,400			1,100			1,400			1,400			1,800		
Machine Dimension (LxWxH)		m	7.6x2.4x2.3						7.9x2.4x2.3						8.7x2.6x2.5			8.1x2.6x2.5			8.1x2.6x2.5			8.9x2.7x2.5						9.1x3.1x2.6			9.7x2.9x2.7								
Machine Weight		ton	14+5.5			14+8.5			16.5+5.5			16.5+8.5			16.5+10			21+5.5			21+8.5			21+10			21+14			28+8.5			28+10			28+14			28+15.5	

LS Premium Injection Molding Machine

the ONE* Series

INJECTION UNIT | Major Specification

			theONE* 1100												theONE* 1300												theONE* 1800											
Injection Unit Code			i46			i64			i101			i135			i64			i101			i135			i174			i101			i135			i174			i216		
Screw Code			Y	A	B	Y	A	B	Y	A	B	Y	A	B	Y	A	B	Y	A	B	Y	A	B	Y	A	B	Y	A	B	Y	A	B	Y	A	B	Y	A	B
Screw Diameter		mm	70	80	90	80	90	105	90	105	115	105	115	125	80	90	105	90	105	115	105	115	125	115	125	140	90	105	115	105	115	125	115	125	140	125	140	160
Injection Capacity Calculated		㎤	1,693	2,212	2,799	2,488	3,149	4,286	3,690	5,022	6,024	5,498	6,596	7,793	2,488	3,149	4,286	3,690	5,022	6,024	5,498	6,596	7,793	7,167	8,468	10,622	3,690	5,022	6,024	5,498	6,596	7,793	7,167	8,468	10,622	9,449	11,853	15,482
Injection Capacity	PS	g	1,560	2,038	2,579	2,293	2,902	3,950	3,400	4,628	5,551	5,067	6,078	7,181	2,293	2,902	3,950	3,400	4,628	5,551	5,067	6,078	7,181	6,604	7,803	9,788	3,400	4,628	5,551	5,067	6,078	7,181	6,604	7,803	9,788	8,708	10,923	14,266
	PE	g	1,232	1,609	2,036	1,810	2,291	3,118	2,684	3,654	4,383	4,000	4,798	5,669	1,810	2,291	3,118	2,684	3,654	4,383	4,000	4,798	5,669	5,214	6,160	7,727	2,684	3,654	4,383	4,000	4,798	5,669	5,214	6,160	7,727	6,874	8,623	11,263
	PP	g	1,199	1,566	1,982	1,762	2,230	3,035	2,613	3,556	4,266	3,893	4,670	5,518	1,762	2,230	3,035	2,613	3,556	4,266	3,893	4,670	5,518	5,075	5,996	7,521	2,613	3,556	4,266	3,893	4,670	5,518	5,075	5,996	7,521	6,691	8,393	10,963
Injection Pressure		Mpa	265	203	161	253	200	147	269	198	165	240	200	169.3	253	200	147	269	198	165	240	200	169.3	238.4	201.8	161	269	198	165	240	200	169.3	238.4	201.8	161	224	178	137
		kgf/㎠	2,707	2,073	1,638	2,578	2,037	1,497	2,748	2,019	1,683	2,447	2,040	1,727	2,578	2,037	1,497	2,748	2,019	1,683	2,447	2,040	1,727	2,431	2,058	1,640	2,748	2,019	1,683	2,447	2,040	1,727	2,431	2,058	1,640	2,283	1,820	1,394
Injection Rate		㎤/sec	461	603	763	651	823	1,121	805	1,096	1,315	1,021	1,225	1,447	651	823	1,121	805	1,096	1,315	1,021	1,225	1,447	1,101	1,301	1,632	805	1,096	1,315	1,021	1,225	1,447	1,101	1,301	1,632	1,266	1,588	2,074
Plasticizing Capacity		kg/h	300	373	435	373	435	554	435	554	613	554	613	687	373	435	554	435	554	613	554	613	687	613	687	823	435	554	613	554	613	687	613	687	823	687	823	949
		g/sec	83	104	121	104	121	154	121	154	170	154	170	191	104	121	154	121	154	170	154	170	191	170	191	229	121	154	170	154	170	191	170	191	229	191	229	264
Max Screw Speed		rpm	200	180	160	180	160	140	160	140	125	140	125	115	180	160	140	160	140	125	140	125	115	125	115	105	160	140	125	140	125	115	125	115	105	115	105	90
Heater Capacity		kw	23.3	31.3	40.5	30.5	40.5	57.5	41.2	57.5	68.6	51.9	68.6	86.0	30.5	40.5	57.5	41.2	57.5	68.6	51.9	68.6	86.0	65.0	86.0	99.8	41.2	57.5	68.6	51.9	68.6	86.0	65.0	86.0	99.8	75.3	99.8	130.0
Injection Speed		mm/sec	120			129			127			118			129			127			118			106			127			118			106			103		
Injection Stroke		mm	440			495			580			635			495			580			635			690			580			635			690			770		
Clamping Force		KN	10,818												12,754												17,708											
		ton	1,103												1,301												1,806											
Mold Opening Force		KN	726												907												1,216											
		ton	74.1												92.5												124.0											
Distance Between Tie-rods		mm	1,420x1,150												1,530x1,280												1,850x1,610											
Die Plate Dimension		mm	1,950x1,650												2,090x1,880												2,450x2,260											
Daylight		mm	2,400												3,050												3,400											
Opening Stroke	Min	mm	1,100												1,650												1,800											
	Max	mm	1,800												2,350												2,600											
Mold Thickness	Min	mm	600												700												800											
	Max	mm	1,300												1,400												1,600											
Max. Mold Weight		kg	21,000												30,000												45,000											
Clamping Speed Max.		m/min	43.7		58.7			60			60			55.4		60			60			60			57.8		60			60			60			60		
Open Mold Speed Max.		m/min	45.5		60			60			60			53.2		60			60			60			60		60			60			60			60		
DRY CYCLE (EUROMAP 6)		sec	4.8		4.5			3.9			3.9			5.0		4.4			4.4			4.4			5.5		4.9			4.9			4.9			4.9		
		mm	990		990			990			990			1,070		1,070			1,070			1,070			1,300		1,300			1,300			1,300			1,300		
Ejector Force		kN	218												258												258											
		ton	22.2												26.3												26.3											
Ejector Stroke		mm	300												300												300											
Capacity of Motor		kw	36.7+71.9		71.9x2			71.9x2			56.3x3			71.9x2		71.9x2			56.3x3			56.3x3			71.9x2		56.3x3			56.3x3			56.3x2+71.9		
Utilized Oil Quantity		L	1,100		1,400			1,400			1,800			1,400		1,400			1,800			2,100			1,400		1,800			2,100			2,500		
Machine Dimension (LxWxH)		m	9.9x3.2x2.7								11x3.4x2.6			11.7x3.6x2.8					12.6x3.6x2.8						12x3.9x3.3					13.0x3.9x3.3					13.7x3.9x3.3		
Machine Weight		ton	39+8.5		39+10			39+14			39+15.5			54+10		54+14			54+15.5			54+20			72+14		72+15.5			72+20			72+38		

LS Premium Injection Molding Machine

the ONE* Series

INJECTION UNIT | Major Specification

			theONE* 2300											
Injection Unit Code			i135			i174			i216			i332		
Screw Code			Y	A	B	Y	A	B	Y	A	B	Y	A	B
Screw Diameter		mm	105	115	125	115	125	140	125	140	160	140	160	180
Injection Capacity Calculated		㎤	5,498	6,596	7,793	7,167	8,468	10,622	9,449	11,853	15,482	13,547	17,693	22,393
Injection Capacity	PS	g	5,067	6,078	7,181	6,604	7,803	9,788	8,708	10,923	14,266	12,483	16,305	20,635
	PE	g	4,000	4,798	5,669	5,214	6,160	7,727	6,874	8,623	11,263	9,855	12,872	16,291
	PP	g	3,893	4,670	5,518	5,075	5,996	7,521	6,691	8,393	10,963	9,592	12,529	15,857
Injection Pressure		Mpa	240	200	169.3	238	202	161	224	178	137	240	184	145
		kgf/㎠	2,447	2,040	1,727	2,431	2,058	1,640	2,283	1,820	1,394	2,447	1,874	1,480
Injection Rate		㎤/sec	1,021	1,225	1,447	1,101	1,301	1,632	1,266	1,588	2,074	1,546	2,019	2,555
Plasticizing Capacity		kg/h	554	613	687	613	687	823	687	823	949	784	949	1,113
		g/sec	154	170	191	170	191	229	191	229	264	218	264	309
Max Screw Speed		rpm	140	125	115	125	115	105	115	105	90	100	90	80
Heater Capacity		kw	51.9	68.6	86.0	65.0	86.0	99.8	75.3	99.8	130.0	87.3	130.0	140.7
Injection Speed		mm/sec	118			106			103			100		
Injection Stroke		mm	635			690			770			880		
Clamping Force		KN	22,642											
		ton	2,309											
Mold Opening Force		KN	1,571											
		ton	1,60.2											
Distance Between Tie-rods		mm	2,030x1,610											
Die Plate Dimension		mm	2,720x2,440											
Daylight		mm	3,700											
Opening Stroke	Min	mm	1,900											
	Max	mm	2,900											
Mold Thickness	Min	mm	800											
	Max	mm	1,800											
Max. Mold Weight		kg	62,000											
Clamping Speed Max.		m/min	59.2			60			60			60		
Open Mold Speed Max.		m/min	55			58.9			60			60		
DRY CYCLE (EUROMAP 6)		sec	6.5			6.0			5.5			5.5		
		mm	1,420			1,420			1,420			1,420		
Ejector Force		kN	422											
		ton	43.1											
Ejector Stroke		mm	400											
Capacity of Motor		kw	56.3x3			56.3x3			56.3x2+71.9			56.3x2+71.9		
Utilized Oil Quantity		L	1,800			2,100			2,500			2,900		
Machine Dimension (LxWxH)		m	13.7x4.3x3.5						14.4x4.3x3.5			15.3x4.3x3.5		
Machine Weight		ton	96+15.5			96+20			96+38			96+41		

			theONE* 2700													
Injection Unit Code			i174			i216			i332			i630		
Screw Code			Y	A	B	Y	A	B	Y	A	B	A	B	C
Screw Diameter		mm	115	125	140	125	140	160	140	160	180	200	230	250
Injection Capacity Calculated		㎤	7,167	8,468	10,622	9,449	11,853	15,482	13,547	17,693	22,393	34,558	45,702	53,996
Injection Capacity	PS	g	6,604	7,803	9,788	8,708	10,923	14,266	12,483	16,305	20635	31,845	42,115	49,757
	PE	g	5,214	6,160	7,727	6,874	8,623	11,263	9,855	12,872	16,291	25,141	33,248	39,282
	PP	g	5,075	5,996	7,521	6,691	8,393	10,963	9,592	12,529	15,857	24,470	32,362	38,235
Injection Pressure		Mpa	238	202	161	224	178	137	240	184	145	179	135	114
		kgf/㎠	2,431	2,058	1,640	2,283	1,820	1,394	2,447	1874	1480	1,823	1,379	1,167
Injection Rate		㎤/sec	1,101	1,301	1,632	1,266	1,588	2,074	1,546	2019	2555	2,427	3,210	3,793
Plasticizing Capacity		kg/h	613	687	823	687	823	949	784	949	1113	1,162	1,531	1,581
		g/sec	170	191	229	191	229	264	218	264	309	323	425	439
Max Screw Speed		rpm	125	115	105	115	105	90	100	90	80	65	60	50
Heater Capacity		kw	65.0	86.0	99.8	75.3	99.8	130.0	87.3	130.0	140.7	190.8	217.8	231.3
Injection Speed		mm/sec	106			103			100			77		
Injection Stroke		mm	690			770			880			1,100		
Clamping Force		KN	26,574											
		ton	2,710											
Mold Opening Force		KN	1,832											
		ton	186.8											
Distance Between Tie-rods		mm	2,190x1,750											
Die Plate Dimension		mm	2,980x2,650											
Daylight		mm	3,900											
Opening Stroke	Min	mm	1,900											
	Max	mm	3,000											
Mold Thickness	Min	mm	900											
	Max	mm	2,000											
Max. Mold Weight		kg	75,000											
Clamping Speed Max.		m/min	49.7			53.7			60			60		
Open Mold Speed Max.		m/min	47.7			51.6			60			60		
DRY CYCLE (EUROMAP 6)		sec	8.2			7.6			5.8			5.8		
		mm	1,530			1,530			1,530			1,530		
Ejector Force		kN	422											
		ton	43.1											
Ejector Stroke		mm	400											
Capacity of Motor		kw	56.3x3			56.3x2+71.9			56.3x3+71.9			71.9x4		
Utilized Oil Quantity		L	2,100			2,500			2,900			3,300		
Machine Dimension (LxWxH)		m	14.1x4.5x3.7			14.8x4.5x3.7			15.6x4.5x3.7			17.5x4.5x3.7		
Machine Weight		ton	122+20			122+38			122+41			122+65		

			theONE* 3300								
Injection Unit Code			i216			i332			i630		
Screw Code			Y	A	B	Y	A	B	A	B	C
Screw Diameter		mm	125	140	160	140	160	180	200	230	250
Injection Capacity Calculated		㎤	9,449	11,853	15,482	13,547	17,693	22,393	34,558	45,702	53,996
Injection Capacity	PS	g	8,708	10,923	14,266	12,483	16,305	20,635	31,845	42,115	49,757
	PE	g	6,874	8,623	11,263	9,855	12,872	16,291	25,141	33,248	39,282
	PP	g	6,691	8,393	10,963	9,592	12,529	15,857	24,470	32,362	38,235
Injection Pressure		Mpa	224	178	137	240	184	145	179	135	114
		kgf/㎠	2,283	1,820	1,394	2,447	1,874	1,480	1,823	1,379	1,167
Injection Rate		㎤/sec	1,266	1,588	2,074	1,546	2,019	2,555	2,427	3,210	3,793
Plasticizing Capacity		kg/h	687	823	949	784	949	1,113	1,162	1,531	1,581
		g/sec	191	229	264	218	264	309	323	425	439
Max Screw Speed		rpm	115	105	90	100	90	80	65	60	50
Heater Capacity		kw	75.3	99.8	130.0	87.3	130.0	140.7	190.8	217.8	231.3
Injection Speed		mm/sec	103			100			77		
Injection Stroke		mm	770			880			1,100		
Clamping Force		KN	32,385								
		ton	3,302								
Mold Opening Force		KN	2,262								
		ton	230.7								
Distance Between Tie-rods		mm	2,270x1,810								
Die Plate Dimension		mm	3,120x2,700								
Daylight		mm	4,100								
Opening Stroke	Min	mm	2,000								
	Max	mm	3,100								
Mold Thickness	Min	mm	1,000								
	Max	mm	2,100								
Max. Mold Weight		kg	81,000								
Clamping Speed Max.		m/min	44.9			58.8			60		
Open Mold Speed Max.		m/min	46.8			60			60		
DRY CYCLE (EUROMAP 6)		sec	9.9			8.0			6.8		
		mm	1,590			1,590			1,590		
Ejector Force		kN	422								
		ton	43.1								
Ejector Stroke		mm	400								
Capacity of Motor		kw	56.3x2+71.9			56.3x3+71.9			71.9x4		
Utilized Oil Quantity		L	2,500			2,900			3,300		
Machine Dimension (LxWxH)		m	15x5.0x3.9						17.7x5.0x3.9		
Machine Weight		ton	145+38			145+41			145+65		

LS Premium Injection Molding Machine

the ONE* Series

INJECTION UNIT | Major Specification

the ONE* 500

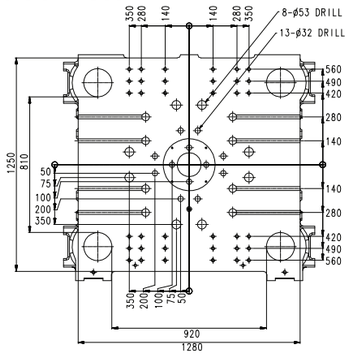

the ONE* 600

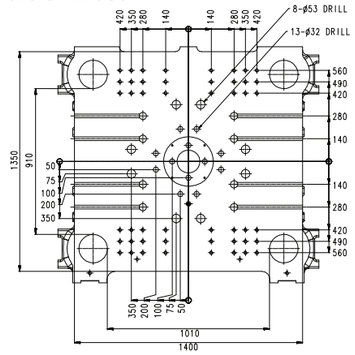

the ONE* 700

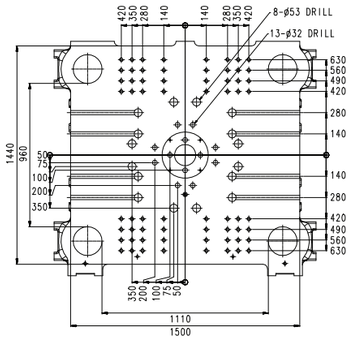

the ONE* 900

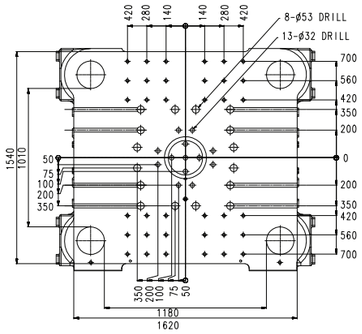

the ONE* 1100

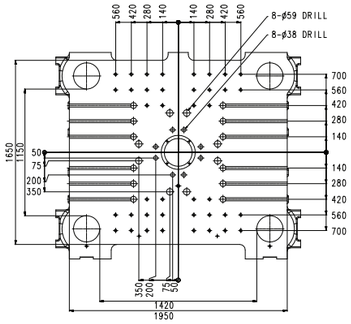

the ONE* 1300

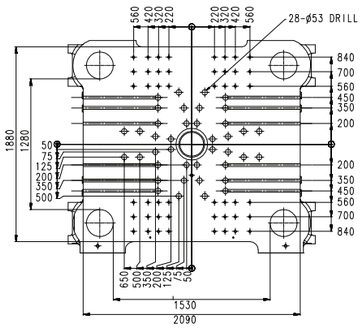

the ONE* 1800

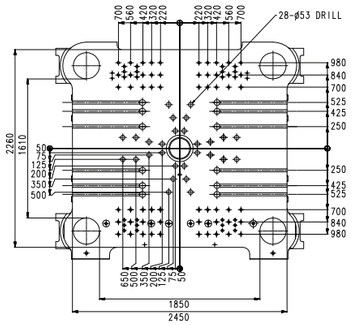

the ONE* 2300

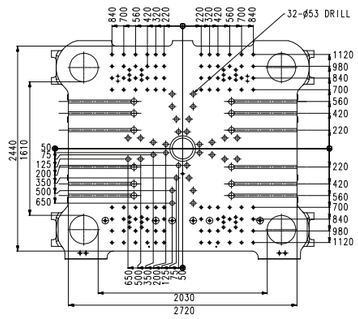

the ONE* 2700

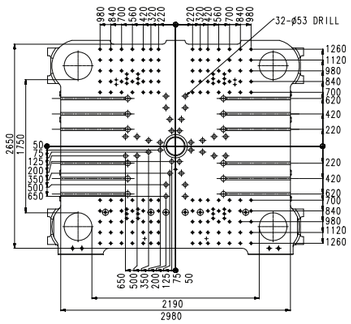

the ONE* 3300

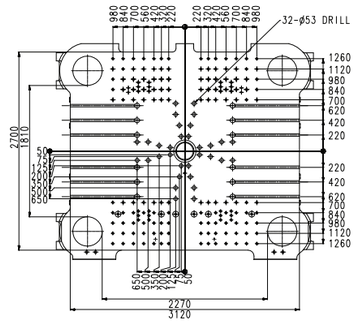

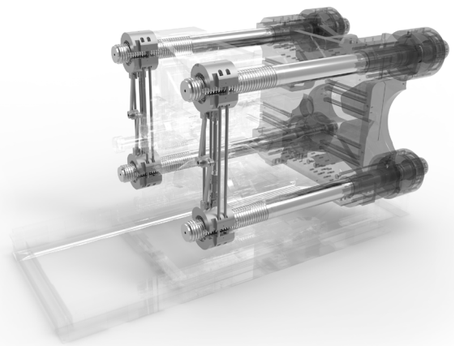

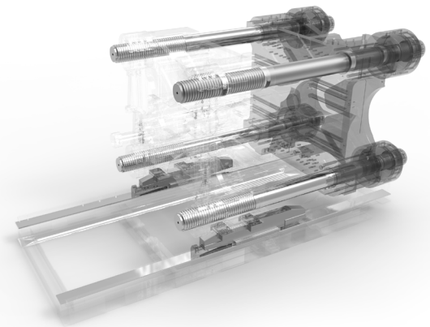

Integrated ***ONE Solution***
Smart Machine *for Industry 4.0*
Delivering ***value***

Standard Equipment

Clamping Unit
Automatic Lubrication Device
Overrun Prenvention Device
Holes Tapped for Installation of Robot
Hydraulic Ejector (A-Circuit)
Low-Pressure Speed Circuit for Mold Setup and Mold Protection
Try again Mold Close Circuit with Mold Protection
Mold Thinkness Potision Adjusting Device
High Speed Mold Open/Close Adjusting Device
Quick Mold Opening Circuit
Safety Gate & Covers
T-Slot Platen
Multi-Ejection (Up to 9 Times) and Vibration Ejection
Single Hydraulic Core Puller
Dual Hydraulic Core Puller
Hydraulic Core Puller 2 Zone
Mold Spring

Injection Unit
Wear Resistant Bimetallic Barrel
Screw (for General Resins)
Closed Loop Control for Injection Process
Ceramic Band Heater
Cable Heater for Nozzle Zone
Heater Cover
Pre-Heating Temperature Control
Injection Ram Advance and Retract Device
Nozzle (Open Type)
Nozzle Retract Timing Selector (Sprue Break)
Screw Back Pressure Regulator
Screw Cold Start Preventing Device
Screw Drive Hydraulic Motor
Screw 1st and 2nd Suck Back
Screw Tip (for General Resins, Non-Return Valve Type)
Injection Speed & Pressure Control Device
Hopper Temperature Controller
Nozzle Retract Sensor

Hydraulic System
Back Pressure Relieving Circuit
Hydromatch System (Muilti-Pump)
Injection Pressure Holding Circuit
Mold Open/Close Hydraulic Brake Circuit
Abnormal Hyd. Oil Temperature Detector
Hyd. Oil Warming-Up Device
Oil Cleaning System (Filter Type)
Oil Cooler & Level Gauge
Solenoid Valve (with Indicator Light)
Core or Ejecting during Mold Open
Ejector Check Valve
Core Pressure Release
Oil Automatic Cooling Control Device
Oil Level Abnormal Detector

Electric System
Closed Loop Controller
Abnormal Operation Warning Device
Abnormal Operation Indicating Device
Intrusion Circuit
Emergency Stop Push Button Switch
Automatic Barrel Heat-Up Control Device
Safety Gate with Interlocks
Shot Counter and Count Up Detection for Target Production
PID Temperature Control (J-type)
Nozzle Temperature Control by SSR
Abnormal Operation Alarm Lamp
Automatic Purge Circuit
Automatic Power Shut Down Circuit
Ejector Retraction Circuit
Heater Band Failure Indicator
Robot Interlock Circuit

General
Instruction Manual
Standard Machine Color
Body, Frame: Dark Gray
Cover: LS Blue & LS Gray
Gate: LS Gray
Cooling Water Distributor
Level Pad
Safety Foot board Ass'y (theONE* 1100~3300)
Maintenance Tools & Spare Parts

Optional Equipment

Clamping Unit
Air Blow Off Unit
Auto. Mold Clamps (QDC)
Hydraulic Ejector Holding Circuit with Valve
Hydraulic Ejector B Circuit
Screw Ejector
Electric Safety Door Automatic Open and Close Device
Tap-Hole Platen
Mold Clamps (Manual)
Hydraulic Core Puller More than 3 Zone
Hydraulic Core Puller Valve Capacity UP
Tie-Bar Puller

Injection Unit
High Response Closed Loop Control with Servo Valve
Anti-Wear and Anti-Corrosive Barrel and Screw
Extension Nozzle
Temperature Controller for Extension Nozzle Heater
Fan Blower
High Speed Injection Device
Nozzle Safety Cover with Interlock (Korean Standrard)
Hydraulic Shut Off Nozzle
Pneumatic Shut Off Nozzle
Special Screw for Flame-Resistant ABS
Special Screw for Various Materials (Uni-Melt,etc.)
Injection Compression
Hopper Ladder
Heater Warm Insulation Cover
Hopper Temperature Control Check
Hopper Sliding Device

Hydraulic System
Mold Open and Close during Charing (Charing Hybrid)
Mold Move on Charging with High Speed Injection (Additional Pump)

Electric System
Air Conditioning Unit in Control Cabinet
Auxiliary Consent Box
Valve Gate Circuit
Safety Gate Opening Interlock Switch (Clamp,Ejector & Core)
Gas Injection Interlock Circuit
Centralized Network System

General
Chiller
Crusher
General Hopper
Hopper Dryer
Hopper Loader
Mixer
Conveyor
Mold Temperature Controller
Take-Out Robot
Foundation Parts

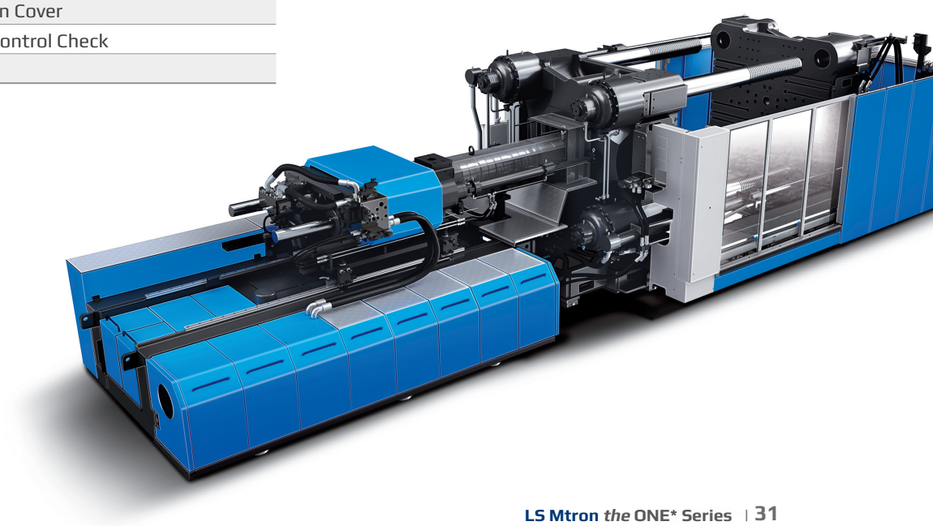

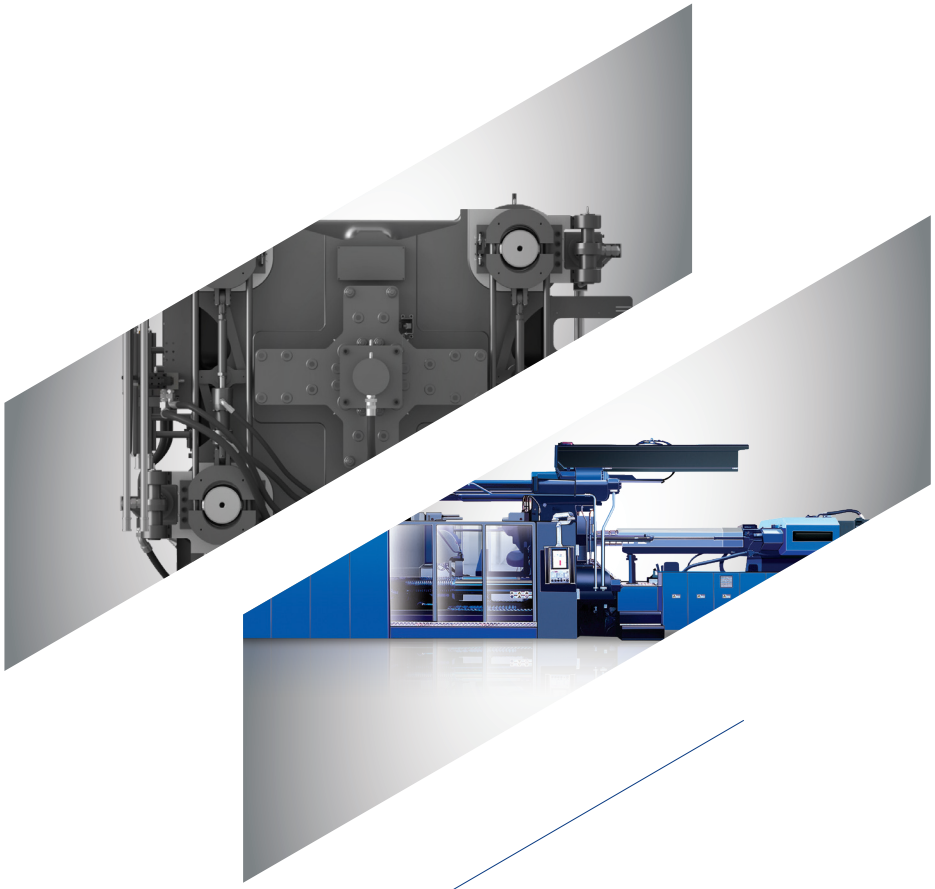

LS Mtron
www.lsinjection.com

Overseas Sales Head Office
7F, LS Mtron Hi-Tech Center, 39, LS-ro 116beon-gil, Dongan-gu, Anyang-si, Gyeonggi-do,14118, Korea
Tel : +82-31-8045-9744

USA Sales Head Office
6670 jones Mill Ct, Suite G Peachtree Corners, GA 30092
Tel : +1-678-395-4389, 770-674-7446 **Fax** : 770-696-5361

LS Machinery (Wuxi) Ltd.
No. 7, Lexing Road, National High-Tech Industrial Development Zone, Wuxi, Jiangsu 214028 China
Tel : +86-510-8299-3877 **Fax** : +86-510-8299-3920

PT LSMTRON MACHINERY INDONESIA
JL.Samsung 2 Blok D3A Jababeka UKM Center Segitiga Emas, Kel. Mekarmukti, Kec. Cikarang Utara, Kab. Bekasi, Prov. Jawa Barat
Tel : +62-21-2908-2775

LS Mtron BRASIL
Rua Maria Candida, N° 2.097, Vila Guilherme-
São Paulo–SP–Brazil, 02071-013
Tel : +55-11-5052-1052

LS Mtron POLSKA
Al. Kalifornijska 27; Rzeplin k. Wrocławia
55-020 Żórawina, Polska
Tel : +48-71-349-77-58

LS Mtron VIETNAM
Charmvit Tower 10F #17 117 Tran Duy Hung Street, Cau Giay District, Hanoi, Vietnam
Tel : +84 24-3201-1572~3

KCS Mark CE ISO9001: 2008 ISO14001 OHSAS18001

www.lsinjection.com LS Mtron facebook LS Mtron YouTube LS Mtron